Splat Rendering Enhancement via Super-Resolution

Giang Bui, Truc Le, Ye Duan
University of Missouri-Columbia
Email: duanye@gmail.com

Abstract

- Point-based splat rendering has been proven as a flexible and efficient technique to render 3D objects due to its simplicity and the availability of point clouds.
- We propose a super resolution approach for enhancement of 3-pass splat rendering to obtain the rendering quality as close to that of texture splat rendering.

Methods

4 pass-rendering pipeline

- Rendering a model to a frame buffer using traditional 3-pass rendering technique.
- Applying super resolution directly on the frame buffer for enhancement.

Proposed network structures

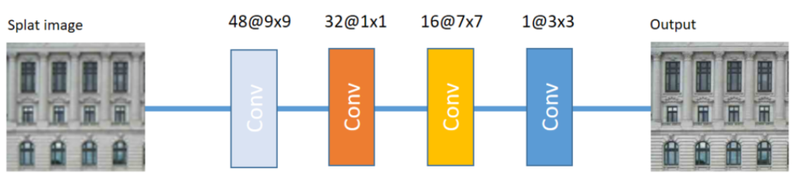

Fig 1. Shallow network: A shallower network for prioritizing running time. The network takes a 3 splat rendering frame buffer as input to generate high quality rendering.

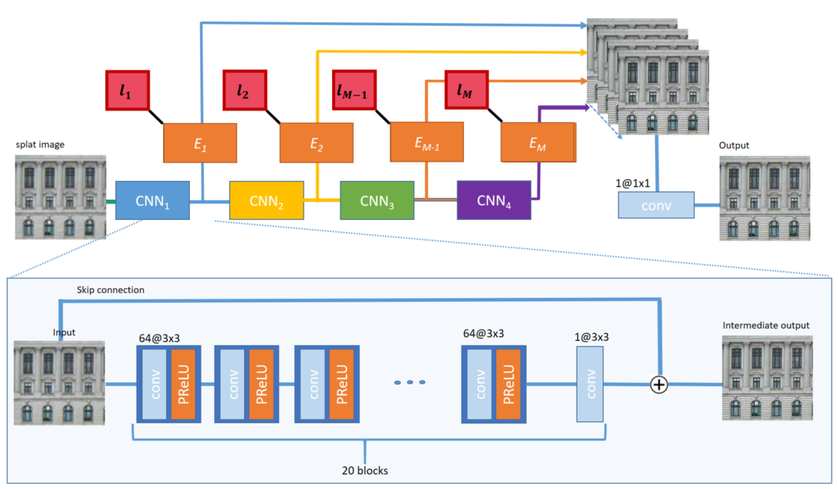

Fig 2. Deep network: A deeper network for prioritizing accuracy. The network is base on cascade model with deeply supervision nets.

Results

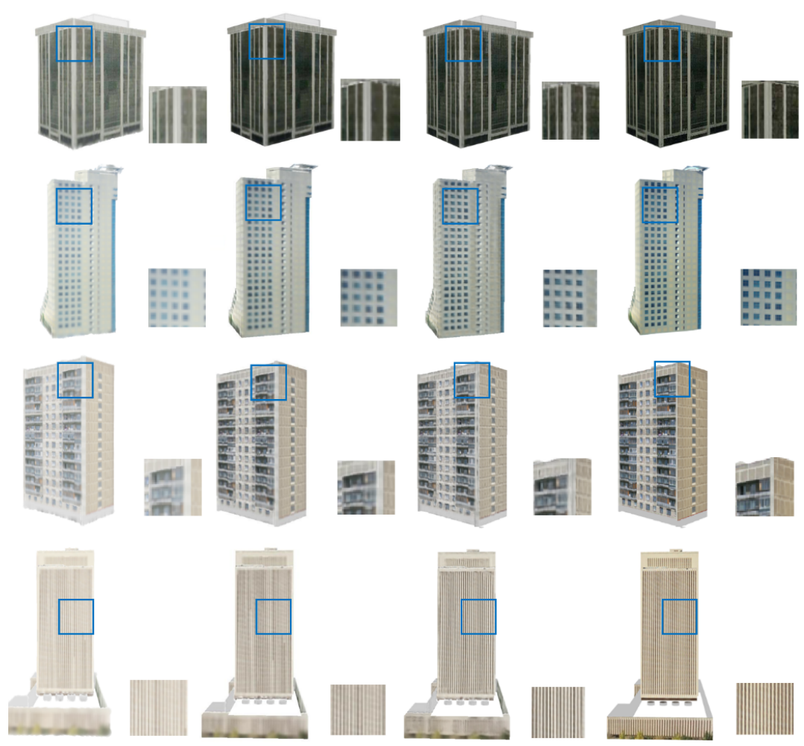

Fig 3. Experimental results (left columns to right columns): (1) 3-pass rendering, (2): Super resolution with the shallow network, (3) Super-resolution with the deep network, (4) ground truth (generated by OpenGL mesh rendering).

No of points	fps	Time per frame(ms)
50K	42	23.8
100K	37	27.02
1000K	29	34.42
10000K	20	50.00

Table 1. Running time of shallow network on different point size datasets. This network can process up 10^7 points in almost real-time with competitive quality.

Method	Avg. PSNR	Avg. SSIM
3-pass rendering	23.424	0.743
Push-pull interpolation [1]	24.985	0.783
Intensity Completion [2]	27.232	0.824
3-pass rendering + shallow network	27.464	0.832
3-pass rendering + deep network	28.654	0.893

Table 2. Quantitative comparisons on the testing dataset which contains 1000 images generated from 70 Google Sketch-up 3D models.

Results (Continued)

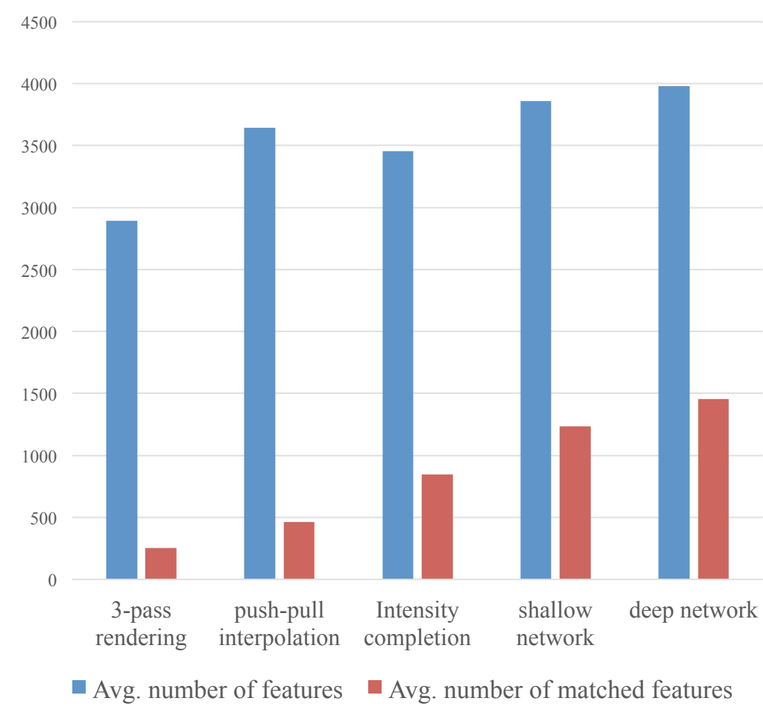

Fig 4. Evaluations on feature extraction and feature matching. The blue columns show the average SITF features extracted from 1000 rendering images. The red columns show the average SIFT features that can be matched using SIFT test ratio.

Conclusion

In this poster, we have proposed a novel framework for splat rendering by incorporating the deep learning based super-resolution technique with traditional 3-pass rendering.

To demonstrate advantages of the framework, we introduce two CNN networks which serve for two different applications: shallow net for running time and deep net for accuracy. We also show it is possible to render synthetic views in a way that allows us to match SIFT descriptors extracted in them against descriptors found in real photos or meshes.

References

[1] Ricardo Marroquim, Martin Kraus, and Paulo Roma Cavalcanti, "Efficient point-based rendering using image reconstruction.," in SPBG, 2007, pp. 101–108.
[2] Dominik Sibbing, Torsten Sattler, Bastian Leibe, and Leif Kobbelt, "Sift-realistic rendering," in International Conference on 3D Vision, 7 2013, pp. 56–63.